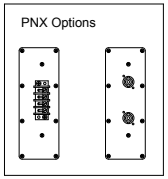

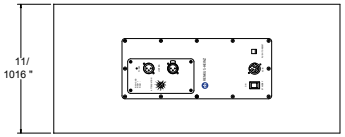

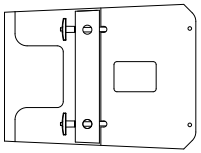

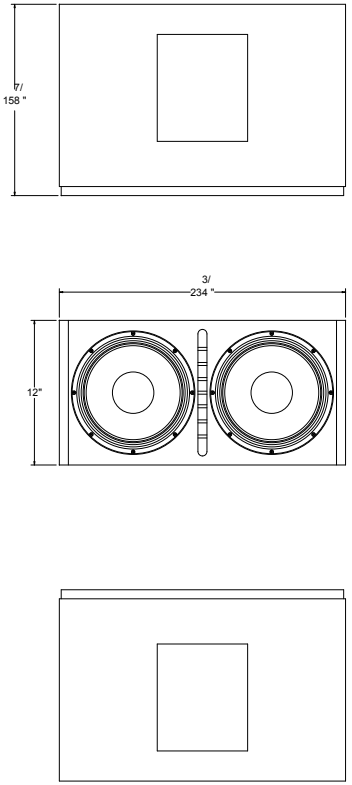

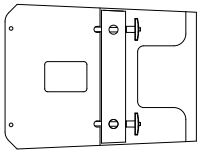

Notes:

Attachment point locations are approximate. Design attachment plates with slotted holes for

DRAWING APPLIES TO
PN102LA, PNX102LA

REV	DESCRIPTION	DATE	BY

UNLESS OTHERWISE SPECIFIED DIMENSIONS ARE IN INCHES
TOLERANCES ARE:
DECIMALS .XX± .01 .XXX± .005
ANGLES ±0= 30"

	INTL	DATE
DRAWN	J.M. / C.R.	8/04
CHECK		
DESIGN		
ENG		
APPROV		
APPROV		

REF DWG: PN102LA_PNX102LA.dxf
DO NOT SCALE DRAWING

NEXT ASSY | USED ON
APPLICATION

THE MATERIAL CONTAINED HEREIN IS PROPRIETARY TO RENKUS-HEINZ AND SHALL NOT BE REPRPRODUCED, DISCLOSED, OR USED FOR ANY OTHER PURPOSE WITHOUT THE WRITTEN APPROVAL OF RENKUS-HEINZ.

RENKUS-HEINZ, inc.

TITLE: Speaker Assembly PNX102LA

SIZE C | CODE IDENT | DWG NO. NOT RELEASED | REV A
SCALE 1 = 10 | WEIGHT | SHEET 1 OF 1